CALL BEFORE YOU DIG

Local Council Information

Printed compliments of AT&T

Standards Manual
Oregon Utilities Coordinating Council

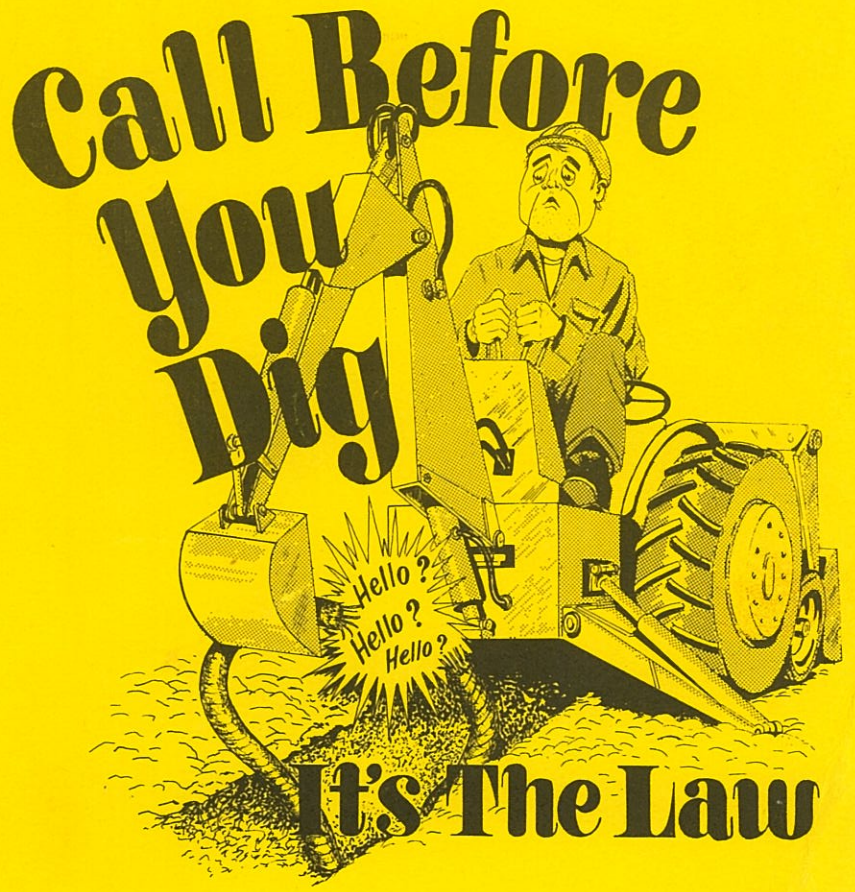

REVISED JANUARY 1994

INDEX

	Page
I. STATEMENT OF PURPOSE	1
II. OREGON UTILITY PROTECTION LAWS	
A. Oregon Revised Statutes 757.541 to 757.571 (Notification and Locating Excavation Regulations)	2
B. Oregon Administrative Rules 860-24-006 and 860-24-007 (Reasonable Accuracy and Color Codes)	9
C. Oregon Administrative Rules 437-83-3449 (Oregon Occupational Safety and Health Code - Specific Excavation Requirements)	11
III. MAP OF LOCAL COUNCILS AND NOTIFICATION SYSTEMS	12
IV. OUCC RECOMMENDED STANDARDS	
A. Construction Coordinating	
1. Preliminary Design Procedure	14
2. Preliminary Construction Procedure	15
B. Utility Easements	16
C. Standard Drafting Symbols	17

INDEX (cont'd)

	Page
D. Zone Locations for Utility Installations	
1. New Subdivisions	18
2. Existing Highways and Rural Roads	19
3. New Rural Roads	20
E. Typical Street Marking	21
V. OUCC SUBSTRUCTURE DAMAGE SUMMARY	22
VI. UTILITY LOCATION REQUEST FORM (Example)	24

IMPORTANT PHONE NUMBERS

Name	Phone Number

EXAMPLE

UTILITY LOCATION REQUEST

Phone Number: (_____)_____-_____ Ext:_____

Caller Name: (your name)

Company Name: (the company you are with)

Mailing Address:

City:_____ State:_____ Zip:_____

Alternate Contact Name:_____ Phone Number:_____

DATE Work To Begin: (2 working days after you call; per state law!)

TIME Work To Begin:

Type of Work: (the reason for excavation; not the method)

Work Being Done For: (company or person that work is being done for)

County: (county work is in) City/Place: (city/etc. work is in)

Address: (house number) Street: (street name and modifier)

Nearest Street Intersection: (nearest intersecting road to job site)

Location Of Work: (where specifically at the job site you will be digging - area that needs to be located for underground lines)

NOTE: If no house number is available, additional information is needed, i.e., what side of which road the work is on, and approx. how far and in which direction is the work site from the nearest intersection.

Has the excavation area been pre-marked in white?

Remarks: (anything else you would like to add/office use)

YOUR REQUEST NUMBER IS_____ PLEASE WRITE THIS NUMBER DOWN FOR FUTURE REFERENCE

STATEMENT OF PURPOSE

The Oregon Utilities Coordinating Council is dedicated to promoting the organized planning and installation of underground facilities, and to the protection of those substructures once placed.

The Oregon chapter is comprised of delegates selected from local coordinating councils throughout the State. The purpose and goal of the councils, both state and local, is to encourage utilities, public agencies, contractors and others in the State of Oregon to coordinate underground installations and to develop and implement means of protecting the same.

Because the local councils consist of volunteers from many diversified occupations, those selected to represent the State Council are able to offer a broad spectrum of experience in the operation and supervision of substructure activities. Their consensus opinions have been used to establish uniform guidelines intended to produce the greatest possible benefits for all concerned.

In an attempt to achieve a wide distribution of delegates' conclusions, a Standards Manual has been developed. It is hoped that the acceptance and application of these recommend-ations will produce greater results in the orderly planning and damage prevention of underground facilities.

OREGON UTILITY PROTECTION LAWS

Excavation Regulation: ORS 757.541 to 757.571

ORS 757.541 Definitions for ORS 757.541 to 757.571. As used in ORS 757.541 to 757.571, unless the context requires otherwise:

(1) "Business day" means any 24-hour day other than a Saturday, Sunday or federal, state or local legal holiday.

(2) "Damage" means harm to, or destruction of, underground facilities including, but not limited to, the weakening of structural, lateral or subjacent support; the penetration, impairment or destruction of any coating, housing or other protective device; and the denting of, penetration into or severance of underground facilities.

(3) "Emergency" means any condition constituting an immediate danger to life or property, or a customer service outage.

(4) "Excavation" means any operation in which earth, rock or other material on or below the ground is moved or otherwise displaced by any means, except sidewalk, road and ditch maintenance less than 12 inches in depth that does not lower the road grade or original ditch flow line. "Excavation" does not include the tilling of soil for agricultural purposes, as defined in ORS 215.203 (2), conducted on private property that is not within the boundaries of a recorded right of way or easement for underground facilities.

(5) "Excavator" means any person who engages in excavation.

THE FOLLOWING APPEARS ON THE BACK OF THE SUBSTRUCTURE DAMAGE REPORT:

1. NAME OF UTILITY, AGENCY, OR COUNCIL, AND PERIOD OF REPORT.

2. ENTER THE NUMBER OF DAMAGES OCCURRING TO YOUR UNDERGROUND LINES DURING THE REPORTING PERIOD. A DAMAGE IS ANY CONTACT WITH YOUR LINE THAT REQUIRES SOME TYPE OF REPAIR TO PUT IT BACK TO ITS CONDITION PRIOR TO BEING HIT. DAMAGES TO ABOVE GROUND APPARATUS THAT SUPPORTS OR CONNECTS UNDERGROUND LINES SHOULD NOT BE REPORTED UNLESS DUG INTO.

3. ENTER THE NUMBER OF DAMAGES DONE BY EACH OF THE APPROPRIATE ENTITIES (CONTRACTORS, ANOTHER UTILITY, HOMEOWNER OR OCCUPANT, GOVERNMENT AGENCY). ALL WATER, SEWER, POWER, GAS, AND COMMUNICATIONS ENTITIES ARE CONSIDERED UTILITIES, REGARDLESS OF OWNERSHIP.

4. ENTER THE NUMBER OF DAMAGES IN EACH CATEGORY FOR TYPE OF WORK TAKING PLACE.

5. ENTER NUMBER OF DAMAGES OCCURRING FOR:

   FAILED TO REQUEST LOCATION.

   FAILED TO EXPOSE, BY HAND METHODS, WHERE LOCATED AND MARKED.

   OTHER MISCELLANEOUS.

   NOTE: THE TOTAL OF NUMBER LISTED IN 3.,4., AND 5., SHOULD EACH EQUAL THE AMOUNT SHOWN ON 2.

6. ENTER THE NUMBER OF CUSTOMERS INCONVENIENCED BY THE DAMAGED FACILITY.

7. ENTER THE NUMBER OF REQUESTS RECEIVED BY ANY MEANS FOR LOCATION SERVICE, WHERE SOME PROPOSED EXCAVATION WAS TO TAKE PLACE, WHETHER OR NOT ANY UNDERGROUND FACILITIES EXIST IN THE AREA.

REVISION: SEPTEMBER 16, 1993

SUBSTRUCTURE DAMAGE SUMMARY

(DEFINITIONS FOR EACH ITEM ON OTHER SIDE)

1. REPORTING ORGANIZATION_____FOR:_____19___

2. NUMBER OF DAMAGES OCCURRING TO YOUR UNDERGROUND LINES_____

3. NUMBER CAUSED BY CONTRACTOR_____ ANOTHER UTILITY_____

   HOMEOWNER OR OCCUPANT_____ GOV'T AGENCY_____

4. WHAT TYPE OF WORK WAS TAKING PLACE WHERE DAMAGE OCCURRED:

   SEWER___WATER___TELE___ELEC___GAS___ROAD___TV___OTHER___

5. REASON WHY DAMAGE OCCURRED:

   FAILED TO REQUEST LOCATION_____

   FAILED TO EXPOSE, BY HAND METHODS, WHERE LOCATED & MARKED___

   OTHER MISCELLANEOUS_____

6. HOW MANY CUSTOMERS WERE INCONVENIENCED_____

7. NUMBER OF REQUESTS RECEIVED BY YOU FOR LOCATING SERVICE_____

_____
PERSON COMPLETING REPORT

_____
TELEPHONE NUMBER

(6) "Locatable underground facilities" means underground facilities which can be marked with reasonable accuracy.

(7) "Mark" means the use of stakes, paint or other clearly identifiable material to show the field location or absence of underground facilities.

(8) "Reasonable accuracy" means a distance measured from the outside lateral dimensions of an underground facility, as the commission, by rule, may prescribe. (see OAR 860-24-006 on page 9)

(9) "Response" means action by the owners of underground facilities to mark or identify by other means the location of its locatable underground facilities in the area of the proposed excavation, to notify the excavator that there are unlocatable underground facilities in the area of the proposed excavation, to notify the excavator that there are no underground facilities in the area of the proposed excavation or to notify the excavator that there are underground facilities in the area of the proposed excavation which are at a depth greater than the excavator plans to dig.

(10) "Underground facilities" means items below the surface of the ground for use in connection with the storage or conveyance of electrical energy, water, sewage, petroleum products, gas, gaseous vapors or hazardous liquids; or the transmission of electronic, telephonic, telegraphic or cable communications. Such items include, but are not limited to, pipes, sewers, conduits, cables, valves, lines, wires, manholes, attachments and those parts of poles or anchors which are underground.

(11) "Unlocatable underground facilities" means underground facilities which cannot be marked with reasonable accuracy, including nonconductive sewers and nonmetallic underground facilities that have no trace wires.

(12) "Utilities notification system" means a system through which a person can notify the owners of underground facilities of proposed excavations and request that the underground facilities be marked. (see list and map on pages 12 and 13)

757.546 PROJECT PLANS TO NOTIFY EXCAVATOR OF LAW REQUIREMENTS. Project plans shall contain language notifying the excavator performing the project that the excavator must comply with the provisions of ORS 757.541 to 757.571.

757.551 EXCAVATOR TO GIVE NOTICE OF PROPOSED WORK; EXEMPTION. (1) Except as provided in subsection (2) of this section, at least 48 business day hours, but not more than 10 business days before commencing an excavation, the excavator shall notify a utilities notification system of the date, location and depth of the proposed excavation, and the type of work to be performed. Notifying a utilities notification system constitutes notice only to the participating members of that service. If no utilities notification system is available, or if the owner of underground facilities is not a member of a utilities notification system, the excavator shall give the same notice to each owner of underground facilities who is known to the excavator or who can be identified and contacted by the excavator.

(2) The notice requirement of subsection (1) of this section shall not apply if the excavator is an employee or tenant of an owner of private property, the excavation is on the private

TYPICAL STREET MARKING

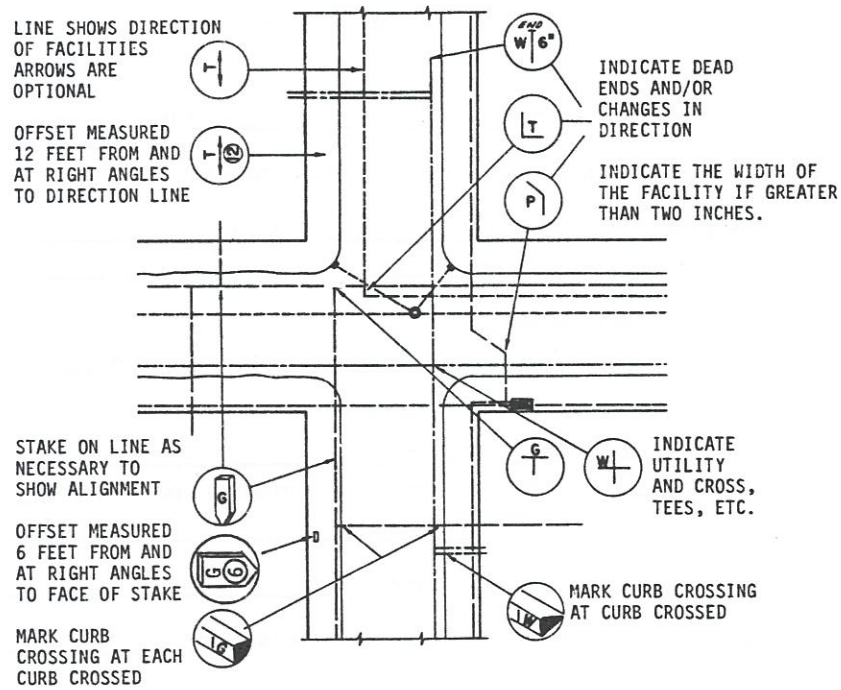

RECOMMENDED ABBREVIATIONS

T	TELEPHONE
P	POWER (ELECTRIC)
W	WATER
G	GAS
S	SEWER
TV	CABLE (TELEVISION)

RECOMMENDED PRACTICES

1. MARKS SHOULD INDICATE THE NAME, INITIALS OR LOGO OF THE OWNER OF THE UNDERGROUND FACILITIES. MAKE YOUR LETTERS CLEAR AND CONCISE.
2. INDICATE BENDS, OFFSETS, AND/OR DEAD ENDS. DO NOT LEAVE THE OTHER PARTY GUESSING.
3. DO NOT ATTEMPT TO SHOW MORE THAN ONE UTILITY AT ANY ONE LOCATION.
4. INDICATE THE WIDTH OF THE FACILITY IF IT IS GREATER THAN TWO INCHES.

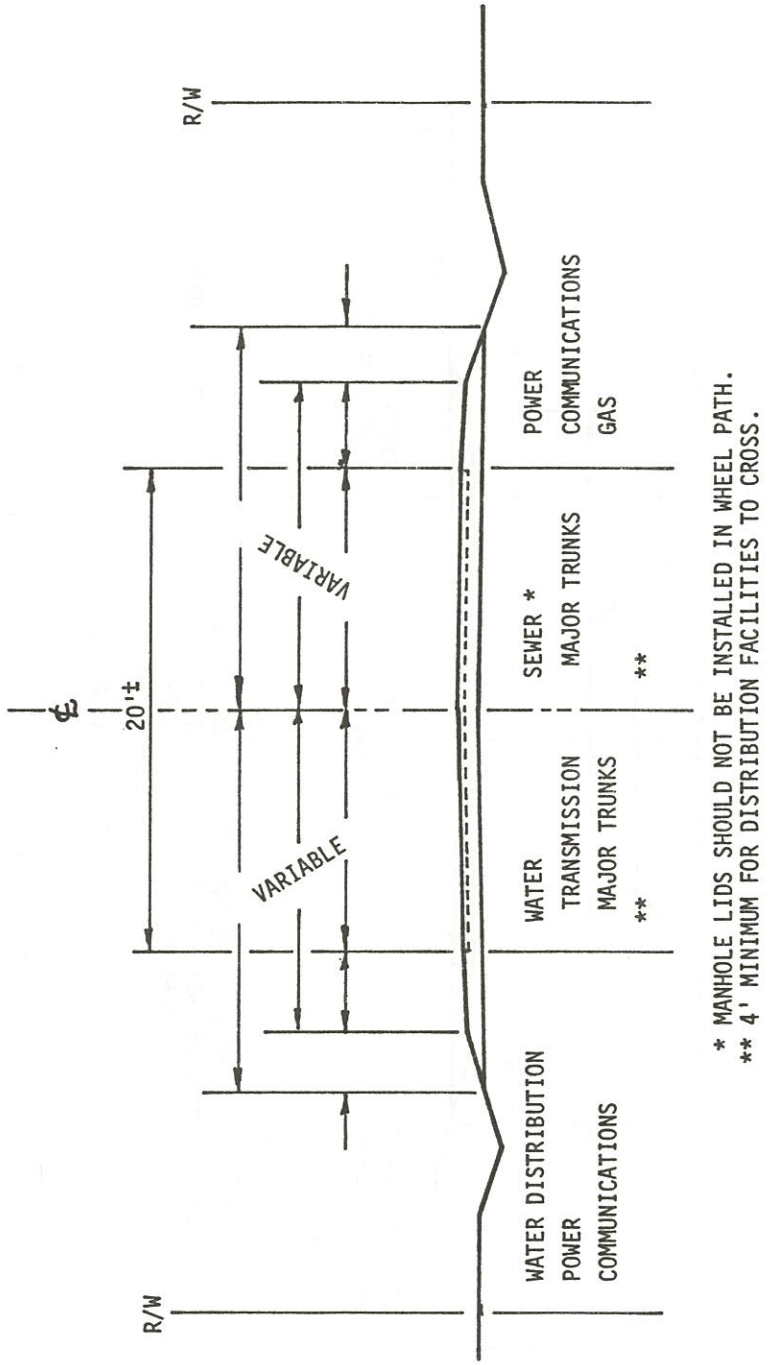

ZONE LOCATIONS

NEW RURAL ROADS

property of that owner and the excavation is less than 12 inches in depth and the excavation is not within an established easement.

(3) The excavator, when giving notice in compliance with subsection (1) of this section, shall furnish information as to how the excavator can be contacted.

757.556 WHEN EXCAVATOR EXEMPT FROM GIVING NOTICE. (1) The excavator is exempt from providing at least 48 business day hours prior notice when:

(a) The excavator is responding to an emergency.

(b) The excavator has an agreement with each owner of underground facilities that marks will be provided on a regular basis as the excavator progresses through a project of more than one day's duration.

(c) The excavator has an agreement with each owner of underground facilities that the notice required by this section is unnecessary.

(d) The excavator discovers an underground facility in an area where the owner of underground facilities had previously indicated there were no facilities.

(2) Notwithstanding paragraphs (a) and (b) of subsection (1) of this section, the excavator shall notify the utilities notification system or the owner of underground facilities of the proposed excavation prior to commencing or continuing excavations.

(3) Notwithstanding paragraph (d) of subsection (1) of this section, if an excavator discovers underground facilities in an area where the owner of underground facilities had previously stated there were no underground facilities, the excavator shall notify the utilities notification system of the location and depth of the underground facilities. If no utilities notification system is available, the

excavator shall notify the owner of the underground facilities and the owner of the property upon which the underground facilities were discovered.

757.561 OWNER TO MARK FACILITIES OR NOTIFY EXCAVATOR THAT NONE EXIST; RULES. (1) Except as provided in subsection (2) of this section, within 48 business day hours after the excavator notifies a utilities notification system or the owner of underground facilities of a proposed excavation, the owner of the underground facilities shall:

(a) Mark with reasonable accuracy all of its locatable underground facilities within the area of the proposed excavation. All marks should indicate the name, initials or logo of the owner of the underground facilities and the width of the facility if it is greater than two inches.

(b) Provide the excavator the best description available to the owner of the unlocatable underground facilities in the area of the proposed excavation.

(c) Notify the excavator that in the area of the proposed excavation there are underground sewer or storm drain facilities which are not marked because those facilities are at a depth greater than the excavator plans to dig; or

(d) Notify the excavator that the owner does not have any underground facilities in the area of the proposed excavation.

(2) If the excavator notifies the owner of underground facilities of an excavation in response to an emergency, the owner of underground facilities shall comply with subsection (1) of this section as soon as possible.

(3) The Public Utility Commission shall adopt rules designating the color with which underground facilities shall be marked. (see OAR 860-24-007 on page 10)

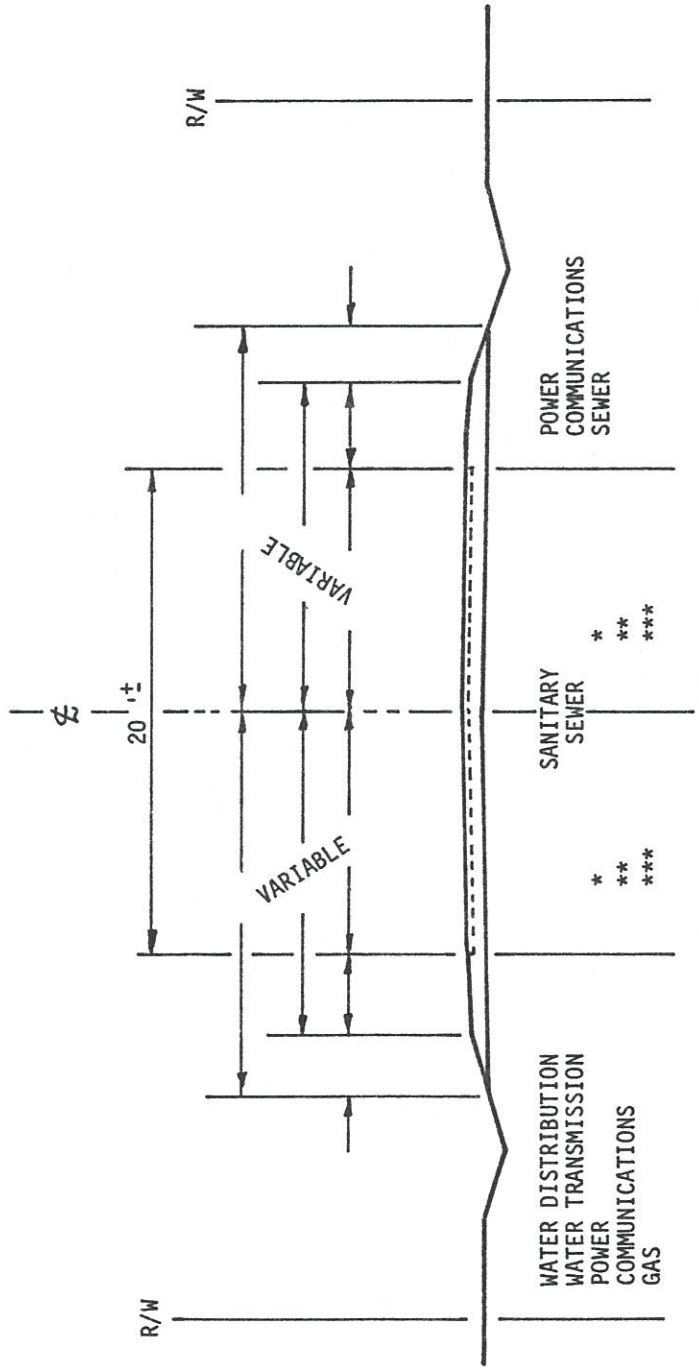

* MANHOLE LIDS SHOULD NOT BE INSTALLED IN WHEEL PATH.
** WATER TRANSMISSION AND SEWER TO BE LOCATED UNDER PAVED AREAS IF LOCAL AUTHORITY ALLOWS.
*** 4' MINIMUM FOR DISTRIBUTION FACILITIES TO CROSS.

ZONE LOCATIONS

EXISTING HIGHWAYS OR RURAL ROADS

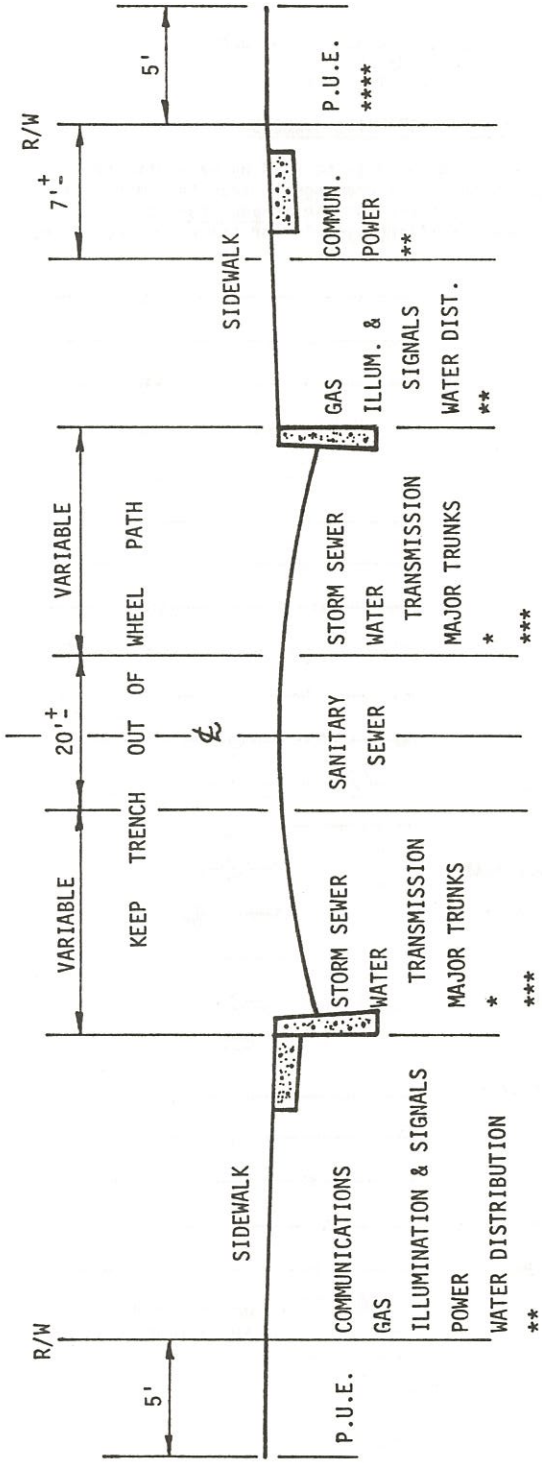

* MANHOLE LIDS SHOULD NOT BE INSTALLED IN WHEEL PATH
** VAULTS, HYDRANTS, PEDESTALS THAT BLOCK ZONES SHOULD BE WORKED OUT IN ADVANCE WITH INVOLVED UTILITIES WITHIN ZONES.
*** 4' MINIMUM FOR DISTRIBUTION FACILITIES TO CROSS
**** RECOMMENDED FOR LESS THAN 60' RIGHT OF WAY

ZONE LOCATIONS

NEW SUBDIVISION STREETS

(4) Each mark shall be effective for not more than 10 days from the date it is made.

757.566 DELAY OF EXCAVATION UNTIL RESPONSE FROM FACILITY OWNERS; DUTY OF EXCAVATOR TO USE CARE; DAMAGE TO FACILITIES. (1) The excavator shall not commence a proposed excavation which requires notice under ORS 757.541 to 757.571 until a response is received from each owner of underground facilities in the area of the proposed excavation, or until 48 business day hours have elapsed from the time of notification.

(2) Once underground facilities have been marked, the excavator shall:

(a) Maintain marks during the excavation period to insure that the original marks remain effective not to exceed 10 days and can be re-established.

(b) Use reasonable care to expose the underground facilities through excavations by hand in a safe manner during trenching and other open excavation.

(c) Use reasonable care during all other types of excavation to avoid damaging the underground facilities.

(3) The excavator shall provide such lateral and subjacent support for underground facilities as may be reasonably necessary for the protection of such facilities.

(4) If the excavator causes or observes damage to underground facilities, the excavator shall notify the owner of the underground facilities immediately. If the damage causes an emergency, the excavator shall also notify all appropriate local public safety agencies immediately and shall take reasonable steps to insure the public safety. The excavator shall not bury damaged underground facilities without consent of the owner of the damaged underground facilities.

757.571 PUBLIC AUTHORITY NOT LIABLE FOR UNAUTHORIZED INSTALLATIONS; EFFECT OF LAW ON POWERS OF GOVERNMENTAL AGENCIES. (1) The public authority with jurisdiction over a right of way is not liable under ORS 757.541 to 757.571 for improper or unauthorized installations not made by the public authority.

(2) Nothing in ORS 757.541 to 757.571 shall limit or affect any of the powers granted to cities, counties, the Department of Transportation or the Public Utility Commission.

OREGON UTILITIES COORDINATING COUNCIL
Standards Committee
October 18, 1978

APPROVED STANDARD SYMBOLS

These symbols are intended to be used by each utility on their main extension permit drawings to show the locations of other utilities. These are for use in addition to each utility's own standard drafting symbols for their own facilities.

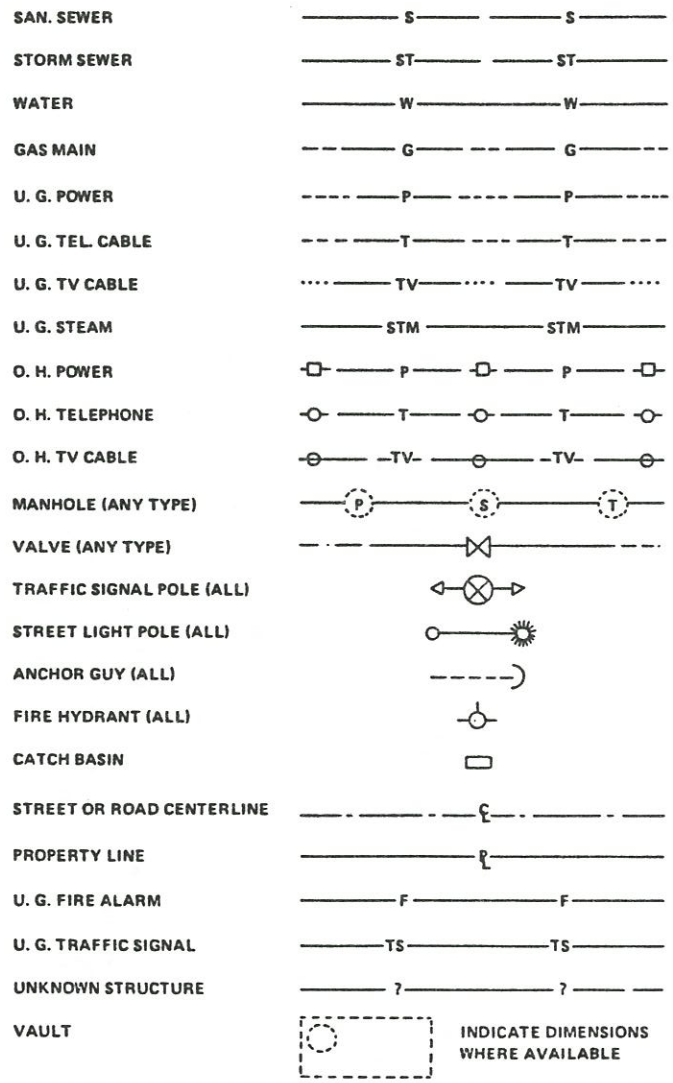

outline responsibilities and duties of all bodies involved in the project; and (7) any other items of particular importance depending on the project. On a private project the developer or the engineer normally assume responsibility for properly coordinating utility installations. As a follow-up measure, notes should be taken of what was discussed and decided with copies distributed to those in attendance. A list of the attendees with their phone numbers and affiliations should also be included with the meeting notes.

UTILITY EASEMENTS

Some subdivision lots have platted lot line easements reserved for the installation, operation and maintenance of utility facilities. The use of these easements is a matter of cooperation on the part of both the land owner and the utilities. Utility facilities should be installed and maintained in a professional manner and the premises restored as nearly as practicable to the same condition it was prior to the utility installation. Buildings or other structures should not be constructed on these easements and no operation should be carried out upon the easement which would prevent or jeopardize the safe operation and maintenance of the utility facilities.

REASONABLE ACCURACY

OAR 860-24-006 Reasonable accuracy of marking locatable underground facilities.

"Reasonable accuracy" means location within twenty-four (24) inches of the outside dimensions of both sides of an underground facility. Offset marking, when used, will have the same tolerance of accuracy.

(As required by ORS 757.541 Section 8)

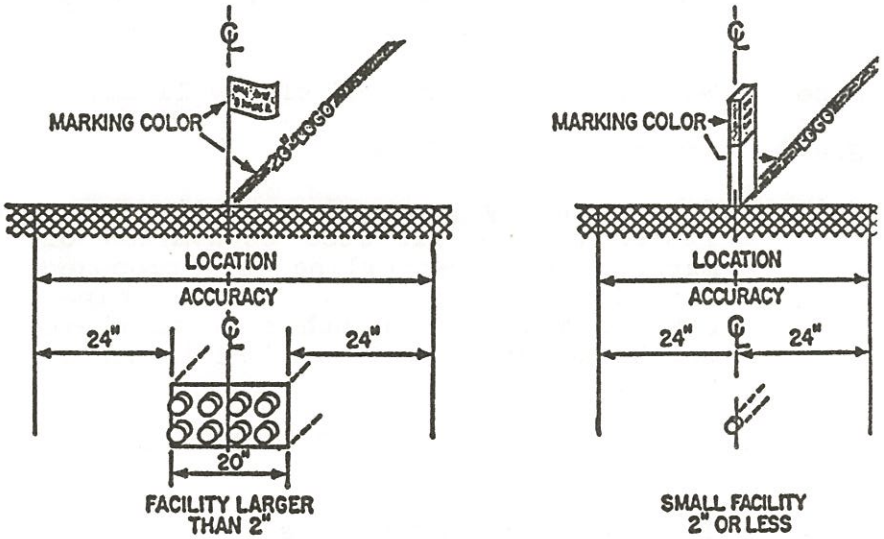

Illustration of Rule No. 860-24-006

COLOR CODE

OAR 860-24-007 Color code for marking location of underground facilities.

Colors for marking location of underground facilities shall be as listed below:

Color	To Indicate
Red	Electric power lines, cables or conduit, and lighting cables.
Yellow	Gas, oil, steam, petroleum, or other hazardous liquid or gaseous materials.
Orange	Communications, cable televisions, alarm or signal lines, cables or conduits.
Blue	Water, irrigation, and slurry lines.
Green	Sewer and drain lines.
White	For voluntary premarking of the outer limits of the proposed excavation or marking the centerline of proposed lineal installations of pipe, cables,conduits, or other items where the trench will not exceed 24 inches in width.

(As required by ORS 757.561 Section 3)

Pink	Temporary survey markings. (Recommended by the American Public Works Association)

New subdivision plats may provide lot line easements for the installations of utilities.

Installation or relocation of utility facilities for private projects may differ in the fact that only those utilities required to meet the needs of the project will be required and their installation may not necessarily conform to any standard. Compliance with requirements of appropriate governing public agencies will have to be met.

Preliminary Construction Procedure

Availability and scheduling of funds, labor, and materials are major concerns of governmental agencies, private developers and utilities alike. Therefore, it would be beneficial for all concerned to mutually resolve their concerns as far in advance of construction as possible.

On complex or extensive projects, it may be beneficial to schedule a pre-bid meeting to clarify construction and utility relocation problems for prospective bidders. Any unusual utility relocation timing requirements should be identified.

After acceptance of bids on the project a pre-construction meeting should be held with all affected parties present including, but not limited to, representatives of: (1) the initiating body or developer and his engineer; (2) all affected governmental agencies; (3) all affected utilities, and (4) all major contractors on the project.

Some items to discuss and resolve should be: (1) contractor's proposed work schedule; (2) timing of installation of various facilities; (3) special requirements peculiar to any affected agencies; (4) scheduling and availability of any special materials required; (5) necessary relocation of existing facilities; (6)

CONSTRUCTION COORDINATING

With continued growth in population and industry in Oregon, a greater degree of standardization and coordination of underground utilities must be attained so that utility installations are done at maximum efficiency and minimum cost. The end result will be lower costs and less inconvenience to the public which we all must serve.

Utility installations may involve new public rights of way, existing public rights of way, subdivision plats or private projects. Procedures common to all four areas are as follows:

Preliminary Design Procedure

When extension of utilities and/or construction of surface improvements are being designed, the body initiating the proposed project should submit plans to the representative government agency and all utilities serving the area. The location and depth of existing utility facilities should be determined and shown as clearly as possible on project plans. Design of the location and depth of proposed utility facilities should follow as closely as possible the standard locations recommended for the area involved and also be shown on project plans. It is realized that in the case of existing utilities and street improvements, standard locations may not be compatible. Space for future utility extensions and installations should be considered in the project design.

Distribution of preliminary plans should be done in a timely manner so that all affected agencies and utilities have sufficient time to review the plans and submit comments on the project.

OREGON OCCUPATIONAL SAFETY AND HEALTH CODE

SPECIFIC EXCAVATION REQUIREMENTS

OAR 437-83-3449 Prior to opening an excavation, effort shall be made to determine whether underground installations, i.e., sewer, telephone, water, fuel, electric lines, etc., will be encountered, and if so, where such underground installations are located.

(a) Utility companies shall be contacted and advised of proposed work prior to the start of actual excavation.

(b) When the excavation approaches the estimated location of such an installation, the exact location shall be determined.

(c) Means shall be taken to prevent dangerous contact or hazardous unintended movement (formerly 34-14-10).

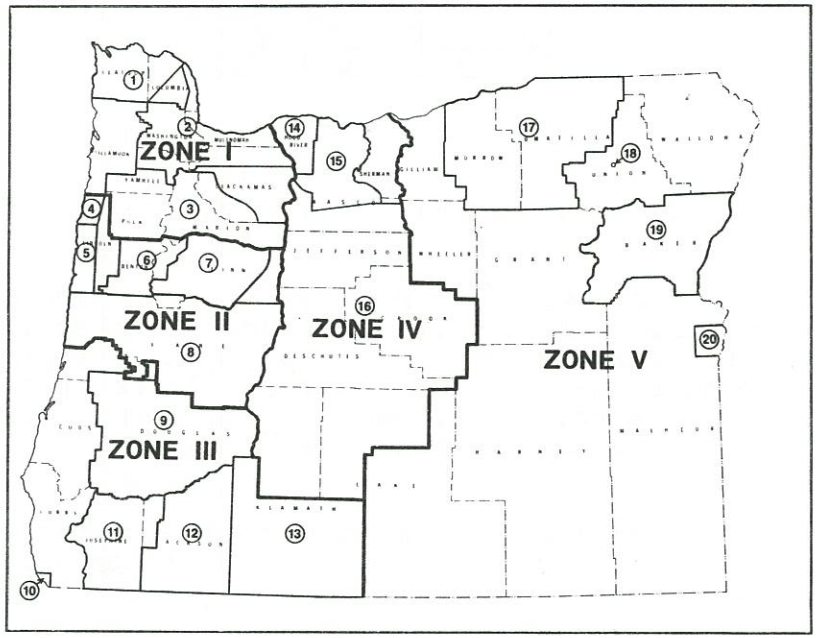

KEY TO MAP

AREA NUMBER	COUNCIL NAME/UTILITY NOTIFICATION SYSTEM	SYSTEM NUMBER
ZONE I		
1	Lower Columbia UCC	800-424-5555
2	Metropolitan UCC/ Utilities Notification Center	246-6699
3	Mid-Willamette UCC	800-332-2DIG
ZONE II		
4	No. Lincoln County UCC	800-332-2DIG
5	So. Lincoln County UCC	800-332-2DIG

ZONE II (cont'd)		
6	Linn-Benton UCC	800-332-2DIG
7	East Linn UCC	800-332-2DIG
8	Lane UCC	800-332-2DIG
ZONE III		
9	Douglas UCC	673-6676
10	South Coast UCC	800-332-2DIG
11	Josephine UCC	476-6676
12	Rogue Basin UCC	779-6676
13	Klamath UCC Lake County UCC	800-332-2DIG 800-332-2DIG
ZONE IV		
14	Hood River UCC	800-332-2DIG
15	Wasco County UCC Sherman County	800-332-2DIG 800-332-2DIG
16	Central Oregon UCC	800-332-2DIG
ZONE V		
17	Umatilla County UCC Morrow County Gilliam County	800-332-2DIG 800-332-2DIG 800-332-2DIG
18	LaGrande/Union UCC	800-332-2DIG 800-424-5555
19	Baker UCC	800-424-5555
20	Malheur UCC (Ontario, Vale & Nyssa)	889-2468