Oregon Administrative Rules Committee Minutes
Thursday, August 25, 2022, 10 a.m. | Zoom Meeting (meeting recorded)

Members: Micah Brown, Mitch Burghelea, *Kevin Hennessy, *Lee Tuminello, *Josh Thomas, and *Kitty O'Keefe
Guests: Jeff Gill, City of Albany, Jeff Cox, PGE, and Frank Planton, One Call Concepts.

1. Announcements and Introductions

    a. Micah called the meeting to order at 10:00 a.m. and introductions were made.
    b. Review of minutes from 5.26.22. No motion was made to approve.
    c. Micah thanked guests and members for attending.

2. OAR Current Committee Item
    a. Review DOJ Feedback for Recommended Language for OAR 952-001-0080
        i. Josh shared his 'Considerations for Implementation of a Design Review System' based on updated legal advice received from the Oregon Department of Justice (see Attachment #1).
        ii. A concern was previously raised in committee at the May meeting about whether it is within the purview of the OUNC.
        iii. Question: Does the OUNC's limited scope of rulemaking authority allow it to create and require this design review process since it does not include excavation?
        iv. Answer from Oregon DOJ: "No… Rules that facilitate the exchange of information through the Center are not within the scope of this authority (per ORS 757.552(2))."
        v. Oregon DOJ conclusion: Center may express support for coordination between project designers and facility operators. Under Public Records Law, "… records within the Center's custody and control are public record subject to inspection by members of the public, including project designers."
        vi. Josh suggested options for next steps, including:
            - Include a new (1) in 952-001-0080 recommending/encouraging project designers contact the center to obtain contact information for facility operators.
            - Increase outreach to utilities and project designers to encourage collaboration and information sharing.
            - Work with OCC on training for operators and system to redirect DIR related request to the utility contacts.
            - Pursue changes to ORS that enable the relevant changes to OARs.
            - Amend ORS 757.552 (2)(c) to remove requirement that OUNC rules to be consistent with the "…Oregon Utilities Coordinating Council Standards Manual of March 31, 1995."
        vii. Micah opened the floor for discussion.
        viii. Kevin commented the Chairman has the privilege to share the full DOJ memorandum and asked to see it.
        ix. Micah asked to check with DOJ before sharing and Josh will contact her. The memorandum includes a boilerplate warning again sharing the document without approval from counsel.
        x. Kevin commented the OUNC can ask the Call Center to get contact information without legislative efforts, working within our existing rules. He suggested the board review the contract with OCC and make sure we are operating within the contract.
        xi. Micah asked the members, 'what's going to be effective? If they don't follow the process now, how will it get better? He doesn't feel that outreach alone will be effective.

xii. Frank asked Kevin about construction coordinating verbiage from pages 17-18 from 1997 OUCC Standards Manual, and discussion followed. Josh shared a PDF of the 1997 manual in the chat (see Attachment #2).
xiii. Mitch commented most of his designers directly contact utilities to share their maps and information. He shared most owners of facilities will pothole.
xiv. Micah asked to set up a meeting to button down next steps. Invite Frank, Josh and Kyle Thomas. Kyle while working for the City of Bend facilitated a few of these types of meetings working with designers. Josh will schedule a time and date.

3. OAR Language or Definition to Clarify/Expand on "Underground Facility"
   a. Discuss alternative approach to rule change –
      i. Micah asked members, do we change in rule? How do we protect?
      ii. Kevin suggested reviewing some of Common Ground Alliance's Best Practices for marking standards.
      iii. Kevin asked, what is unlocatable in the field? He is seeing 'UL' marks in the field.
      iv. Micah has not seen the UL markings in the field and feels there could be a liability of using those marks.
      v. Kevin commented on structural support and standardized clarity. Put in context what's locatable and what is not locatable.
      vi. Mitch feels we have a process in place for unlocatable and we document that. He feels anchors and manholes is a separate issue.
      vii. Josh commented under section 6 on pg. 9 of manual, both definitions are in statue in addition to rule.
      viii. Mitch commented that locatable was never part of the Standards Manual. What defines locatable he asked?

   b. Discuss changes to OAR 952-001-0070(11)
      i. Kevin mentioned Alba had previously suggested adding a section on anchors and poles to this section. Would provide clarification of what's expected in the field. He suggests looking into this.
      ii. Micah asked Josh to look into this.
      iii. Josh shared he included this in his OUNC Board Brief – 2023 Legislative Plan.
      iv. Jeff Cox commented, 'establishing best practice is a good idea', and agrees with expanding clarification.

4. Active OAR Tabled Item Updates
   a. Length of a Ticket (Ticket Length)
      i. Micah commented there is no regulation in place and there is unintentional disregard to get a 2 full business day locate accomplished.
      ii. Micah would like to see if the new ITICnxt is helping for data status.
      iii. Kevin contacted OCC and asked for some raw data. He feels making data available from the call center can help us see how ITICnxt is being used. He will share what Scott Gallegos sent him with Frank.

   b. White Paint or Virtual White Line
      i. Micah shared; we need to work on language to present to the board if we move forward. We have a motion to move forward
      ii. Mitch had left the meeting, so members agreed to table until the next meeting.

5. New Business
   a. 2023 Strategic Planning
      i. Josh shared his screen and members viewed his OUNC Board Brief (See Attachment #3)

ii. Josh shared he is now a Rules Coordinator. Diane Davis of the OPUC is available to the OUNC as well.

b. Legislative Priorities for Next Session (See Attachment #3)
   - Service Tariff Exemptions –
     - Members asked to look at older issues of Standards Manual. Frank has old issues and will bring to Joint States for Kitty.
     - The 1997 Manual was referenced in the chat (Attachment #2).
     - Will bring back to full OUNC Board for discussion.
   - Underground Facility Definition
     - No legislative action anticipated.
   - Mandatory Positive Response
     - Kevin asked if OCC could provide outreach for this?
     - Kevin suggested giving a discount to members using positive response.
     - Micah asked, how can we influence our operators to participate?
     - Kevin shared he cannot comment on specifics to legislative action and unless he sees in writing, he is not privy.
   - Micah will rely on Josh and Diane for rule changes.Mandatory White Lining/Electronic White Lining
     - Will review rules in committee, were waiting on results from ITICnxt system.
     - No legislative action anticipated.
   - Design Review System (DIR/DLR)
     - Will look to change procedure and work within rules.
     - May want to revisit 1995 Standards Manual reference in statute, will take to full board.
   - Paint Marking Remediation
     - Micah feels this can be removed. No action needed but will monitor in case it is reintroduced next session.

c. Legal Transfer Ticket discussion per Mitch Burghelea
   i. Tabled. Keep on agenda for next meeting

6. Old Business –
   a. Discuss financial responsibility of Excavator during Large Scale Projects (excessive and redundant locate requests.) – Tabled, and will involve Mitch and Melanie
   b. Review Required Locate Process for OCC (what is the definition of excavation?) – Tabled, Micah underscored the importance of having a representative from OCC in all future OAR Committee Meetings.

7. Next Meeting – tentative date: 3rd Thursday in September 2022

Meeting adjourned at 12:10 pm.
Minutes submitted by Kitty O'Keefe 8.26.22

Considerations for Implementing a Design Review System

August 25, 2022

Design Review System Background

- A Design Review System aims to address instances where the designer needs information about underground utilities within a job site in the early planning stages, but they do not yet need a full locate with actual paint on the ground.

- Other states have devised a Design Review System that includes a:
  - Design Information Request (to get maps, blueprints or other related information on the project site); and
  - Design Locate Request (to get marks on the project site).

- This would require changes to OAR 952-001-0080 and adding definitions to OAR 952-001-0010.

Envisioning a Design Review System (DIR/DLR) for Oregon

CONCEPT ORIGINATED WITH WASHINGTON

CREATED DRAFT LANGUAGE FOR OREGON

REQUESTED REVIEW BY OREGON DOJ

Is it within OUNC Purview?

- A concern was raised in committee about whether it is within the purview of the Oregon Utility Notification Center.
- Under 757.552, in the duties of the center, it says in (2)(c) that OUNC adopts rules "... that regulate the notification and marking of underground facilities to prevent damage to underground facilities."
- **Question:** Does OUNC's limited scope of rulemaking authority allow it to create and require this design review process since it does not include excavation.

Oregon DOJ Guidance

- **Answer:** “No … Rules that facilitate the exchange of information through the Center are not within the scope of this authority [in ORS 757.552(2)].”

- Design Information Requests and Design Locate Requests are “… requests for information that will not result in excavation.”

- OUCC Standards Manual of 1995 recommends developers share preliminary designs with utilities.

- Oregon DOJ Conclusion:
  - “Center may express support for coordination between project designers and facility operators.”
  - Under Public Records Law, “… records within the Center’s custody and control are public record subject to inspection by members of the public, including project designers.”

Next Steps, Options

- Include a new (1) in 952-001-0080 recommending/encouraging project designers contact the center to obtain contact information for facility operators.
- Increase outreach to utilities and project designers to encourage collaboration and information sharing.
- Work with OCC on training for operators and system to redirect DIR related requests to the utility contacts.
- Pursue changes to ORS that enable the relevant changes to OARs.
- Amend ORS 757.552 (2)(c) to remove requirement that OUNC rules to be consistent with the "… Oregon Utilities Coordinating Council Standards Manual of March 31, 1995."

Questions?

OUNC BOARD ISSUE SUMMARY
#22-08-0014

SUBJECT: 2023 Legislative Plan - **DRAFT**

MEETING DATE: August 25, 2022

PREPARED BY: Josh Thomas, Executive Director

The Oregon State Legislature convenes annually in January/February in the Oregon State Capitol in Salem. In odd-numbered years, a "long" or "full" session may last up to 160 days. In even-numbered years, a "short session" can last a maximum of 35 days. Proposed legislation has a much better chance of being heard and acted upon during a full session.

While a start date has not yet been announced, there are some key checkpoints coming up as established by House Concurrent Resolution 206 (2022):

- **September 23** - Deadline to Request Measures from Legislative Counsel
- **December 5** - Legislative Counsel returns draft measures
- **December 21** - Deadline to file bills with the Secretary of the Senate or Chief Clerk of the House
- **January/February 2023** (*date TBD*) – Start of 2023 full session

In addition to the ongoing monitoring and proactive efforts referenced toward the end of this document, our plan for 2023 (and beyond) may also need to involve legislative activity. During OUNC committee meetings and board meetings in recent years, a variety of ideas have been discussed for possible action.

Possible Legislative Priorities

- **Service Tariff Exemptions** – ORS 757.552 (4) could at least use a language update since it refers to telephone calls and should include online ticket submissions (perhaps change language to "… subscriber who requests fewer than 50 tickets …").

  Additionally, several groups identified in ORS 757.552 (4) are capped at $500 annually or are charged no fees. This includes:

  a) Cities with a population under 15,000;
  b) Telecommunications utilities serving fewer than 50,000 access lines and regulated by the Public Utility Commission under ORS chapter 759;
  c) Cable system operators serving fewer than 15,000 customers;
  d) Utilities, special districts, people's utility districts or authorities providing electricity, water or sanitary sewer service to fewer than 15,000 residential customers; and
  e) Telecommunications cooperatives.

  It is estimated that these exemptions amount to more than $100k annually. The standing question is whether these exemptions should remain in place, and if so, whether we are adequately confirming that members still qualify for the specified exemptions.

- **Underground Facility Definition** – To eliminate pole anchors and manholes from being viewed as locatable, there has been discussion about whether to make clarifications in OARs, such as adding the word "locatable" to 952-001-0070 and changing references from "facility"/"facilities" to "utility"/"utilities." However, there has also been discussion about whether to change the definition of "underground facilities" in ORS 757.542.

- **Mandatory Positive Response** – At present, Oregon is not a mandatory “positive response” state. While utility operators are obligated by state dig law to have their facilities located, they are not required to report back to the call center when the locate is completed. When an operator opts out, the ticket labels them as "Does not participate." There has been discussion about whether to change this from voluntary to mandatory, and it could be addressed in rule or statute.

- **Mandatory White Lining/Electronic White Lining** – There are differing opinions about whether to make this mandatory and whether it could help increase compliance through enforcement. This would involve changes to OAR 952-001-0040 and potentially ORS 757.993.

  While it was hoped that ITICnxt may provide an option for electronic white lining (aka digital or virtual white lining), it does not appear that the technology provides the accuracy needed to proceed at this time. Drawn polygons for ticket requests serve to notify the utilities but are not used to define the parameters of the dig site.

- **Design Review System (DIR/DLR)** - When planning construction projects, there are many instances where the designer needs information about underground utilities within a job site, but they do not yet need a full locate with actual paint on the ground. As an alternative, other states have devised a Design Review System that includes a Design Information Request (to get maps, blueprints or other related information on the project site) and a Design Locate Request (to get markings on the project site). This avoids unnecessary locates when excavation is not yet occurring. It requires changes to OAR 952-001-0080 and adding definitions to 952-001-0010.

  Several past and current board members have expressed that they believe this could be an enhancement to our damage prevention efforts. They have stated that a design review system would provide designers and planners with information in the early stages of a project that will help prevent damage while streamlining the system by eliminating unnecessary locates.

  A question was raised in committee about whether it is within the purview of the Oregon Utility Notification Center and its limited scope of rulemaking authority to create and require this design review process since it does not include excavation. Under 757.552, in the duties of the center, it says in (2)(c) that OUNC adopts rules "... that regulate the notification and marking of underground facilities to prevent damage to underground facilities."

  According to the Oregon Department of Justice, “… rules that facilitate the exchange of information through the center are not within the scope of OUNC’s authority.” This is in accordance with ORS 757.552 (1). They refer to the requirement that our rules conform with the Oregon Utilities Coordinating Council Standards Manual of 1995, which recommends developers share preliminary designs with utilities.

  Changes to statute could help advance a design review system similar to Washington’s, but as committee members have voiced and the DOJ has suggested, there may be other ways to encourage or help facilitate this information sharing without involving the legislative process.

- **Reference to the 1995 Standards Manual** – When new Oregon Revised Statutes established the Oregon Utility Notification Center in Chapter 757 back in 1995, it made sense for ORS 757.552 (2)(c) to require that OUNC rules to be consistent with the “… Oregon Utilities Coordinating Council Standards Manual of March 31, 1995.”

  At that time, rules were being established that did not previously exist, so it made sense for them to conform with the existing standards manual at that time. Over the years, changes have been made to the manual and one could argue that it is no longer practical to require that all future rules must conform with an outdated version of a document that has evolved over the past 27 years. As such, it may be prudent to remove this sentence from ORS 757.552 (2)(c).

- **Paint Marking Remediation** – During the 2021 legislative session, House Bill 3181 was sponsored by Representative Gary Leif in Roseburg. It would have required OUNC to adopt new

rules for using temporary or non-permanent marking paint with a new requirement to remove markings or pay for costs related to removal. This was initiated at the request of a constituent, but no action was taken during the last full session, and the legislator passed away in July 2021. There has been no indication that the bill (or a version of it) will be reintroduced.

The OAR committee has previously discussed adding recommended practices to FAQs and the OUNC website with this possible language, "Use appropriate non-permanent marking paint for all utilities and conduct pre-marking activities in line with CGA and APWA best practices. The excavator is responsible for paint removal, when necessary."

- **Mission/Scope of Authority** – With recent discussions about the scope of the OUNC's authority and functions, does the language in ORS 757.552 need to be revisited and clarified?

- **State Funding** – Should OUNC pursue state funding during the 2023 session? This suggestion has come up in previous discussions about the budget and service tariff.

- **Enforcement** – Do any changes or updates need to be made to ORS 757.993 addressing fines and penalties?

- **Ticket Length** – This would involve establishing a 750-foot maximum length on a ticket, and it would be an OAR change rather than ORS.

- **Other** – Are there any other concepts or proposals that should be considered in this plan?

Legislative Monitoring

With the next full session convening in 2023, the Oregon Utility Notification Center will monitor for any bills that are relevant to our work in preventing damage to underground utilities and raising awareness about safe excavation practices. We will coordinate with Diane Davis of the Oregon Public Utility Commission.

Other Proactive Efforts

As we have done in previous years, we will pursue a proclamation from the Governor's Office to recognize the month of April as National Safe Digging Month in Oregon. This will involve working with Oregon's new Governor's Office staff, so we will make the request early in hopes of getting it passed.

We are inquiring about the possibility of exhibiting in a showcase in the Capitol galleria next year. This entire area is currently closed to the public for a massive construction project. We are also asking about possibly hosting an event in the Capitol during the session, requesting floor speeches in the House and Senate, and distributing information and giveaways to legislators and staff to underscore the vital importance of Oregon 811's ongoing work. This would most likely occur during the month of April.

Recommendation

Committee members should review and discuss the possible elements of this plan and determine priorities to bring back to the full board in September. Add any that are missing and refine others as needed. Based on defined priorities, staff can begin laying the groundwork for the respective legislative concepts necessary to proceed in advance of the September 23 deadline for Legislative Counsel. This plan will be updated and finalized, and elements will be added to the OUNC Strategic Plan.

Standards Manual

Oregon Utilities Coordinating Council

OREGON STATE LIBRARY
3 4243 00112979 6
REGON
JUN 2 5 1997
STATE LIBRARY

Call Before You Dig

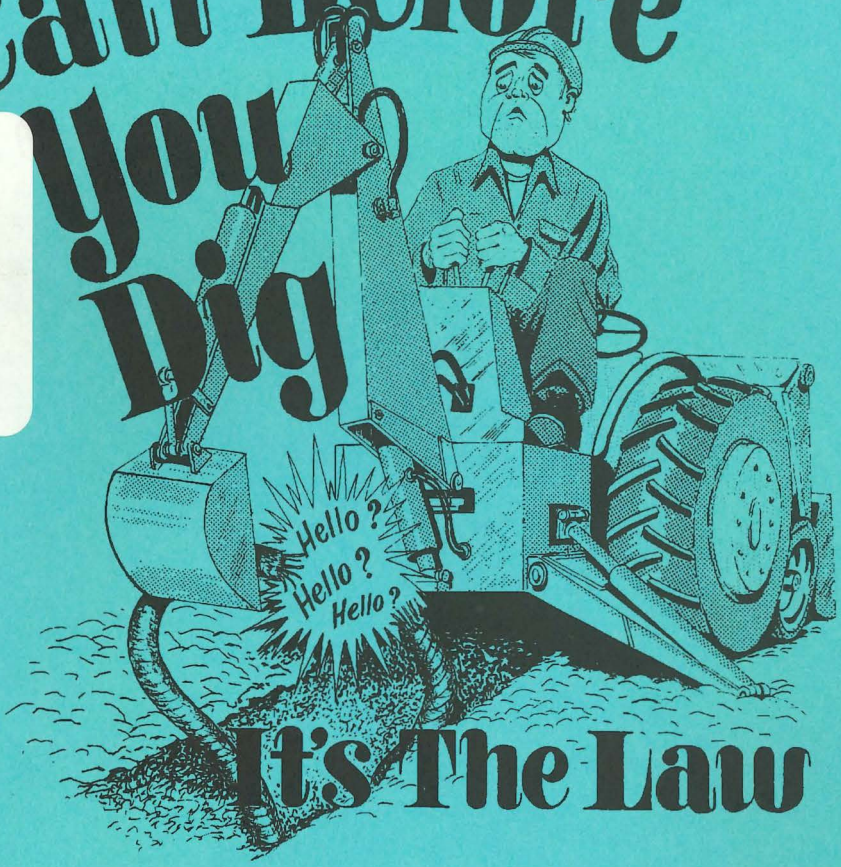

OR
Y/Ut3
.8Ut3
:997
c.2

It's The Law

1-800-332-2344

Revised July 1997

Index

I. Statement of Purpose 1

II. Oregon Administrative Rules 2

III. Business Hours 10

IV. Complaint Process 10

V. Permanently Marking Underground Facilities 10

VI. Reasonable Accuracy 11

VII. Typical Street Marking 12

VIII. Color Code 13

IX. Oregon Occupational Safety and Health Code 14

X. Map and Notification Systems 15-16

XI. Construction Coordinating 17

XII. OUCC Joint Trench Recommendations 19

XIII. Substructure Damage Summary 21

XIV. Location Request Form 23

XV. Frequently Asked Questions 24

OR Y/Ut3 .8Ut3 :997 c.2

Standards manual, Oregon
Utilities Coordinating

Statement Of Purpose

The Oregon Utilities Coordinating Council is dedicated to promoting the organized planning and installation of underground facilities, and to the protection of those substructures once placed.

The Oregon chapter is comprised of delegates selected from local coordinating councils throughout the State. The purpose and goal of the councils, both state and local, is to encourage utilities, public agencies, contractors and others in the State of Oregon to coordinate underground installations and to develop and implement means of protecting the same.

Because the local councils consist of volunteers from many diversified occupations, those selected to represent the State Council are able to offer a broad spectrum of experience in the operation and supervision of substructure activities. Their consensus opinions have been used to establish uniform guidelines intended to produce the greatest possible benefits for all concerned.

In an attempt to achieve a wide distribution of delegates' conclusions, a Standards Manual has been developed. It is hoped that the acceptance and application of these Oregon Administrative Rules and OUCC Council recommendations will produce greater results in the orderly planning and damage prevention of underground facilities.

Oregon Administrative Rules

Chapter 952, Division 1
Oregon Utilities Notification Center

DEFINITIONS

952-001-0010 (1) "Business day" means any 24-hour day other than a Saturday, Sunday or federal or state legal holiday.

2) "Damage" means harm to, or destruction of underground facilities including, but not limited to, the weakening of structural, lateral or subjacent support; the penetration, impairment or destruction of any coating, housing or other protective device; or the denting of, penetration into or severance of underground facilities.

(3) "Designer" means any person who prepares a drawing for construction or other project which requires excavation or demolition.

(4) "Emergency" means an occurrence involving an immediate danger, demanding prompt action to prevent loss of life, or to mitigate damage to property, or to prevent interruption of essential public services (as determined by an emergency response agency or the facility operator) or to prevent a customer service outage (as determined by the facility operator).

(5) "Excavation" means any operation in which earth, rock or other material on or below the ground is moved or otherwise displaced by any means, except sidewalk, road and ditch maintenance less than 12 inches in depth that does not lower the original grade or original ditch flow line. "Excavation" does not include the tilling of soil for agricultural purposes, as defined in ORS 215.203(2), conducted on private property that is not within the boundaries of a recorded right-of-way or easement for underground facilities.

(6) "Excavator" means any person who engages in excavation.

(7) "Locatable underground facilities" means underground facilities which can be marked with reasonable accuracy.

(8) "Mark" or "marking" means an indication, from the use of stakes, paint or other clearly identifiable material, to show the field location or

absence of underground facilities at a proposed work site. A "mark" or "marking" also includes permanent marking devices, such as disks, posts or signs, placed to show the location of underground facilities.

(9) "Operator" means any person, municipal corporation, political subdivision of the state with control over underground facilities. Operator includes any person, as defined in ORS 756.010, having the right to bury underground facilities in any public right-of-way, or in any utility easement.

(10) "Oregon Utility Notification Center" (Center) means the state agency that administers a statewide system through which a person can notify operators of underground facilities of proposed excavations and can request that the underground facilities be marked.

(11) "Project plans" mean any drawings, specifications or any other documents prepared in anticipation of work involving excavation.

(12) "Reasonable accuracy" means location, within 24 inches, of the outside lateral dimensions of both sides of an underground facility.

(13) "Response" means action taken by operators of underground facilities to:

(a) Mark or identify by other means the location of its locatable underground facilities in the area of the proposed excavation;

(b) Notify the excavator that there are unlocatable underground facilities in the area of the proposed excavation;

(c) Notify the excavator that there are no underground facilities in the area of the proposed excavation; or

(d) Notify the excavator that there are underground facilities in the area of the proposed excavation which are at a depth greater than the proposed excavation.

(14) "Underground facilities" means items partially or entirely below the surface of the ground for use in connection with the storage or conveyance of electrical energy, water, sewage, petroleum products, gas, gaseous vapors or hazardous liquids, or the transmission of electronic, telephonic,

telegraphic or cable communications. Such items include, but are not limited to, pipes, sewers, conduits, cables, valves, lines, wires, manholes, attachments and those parts of poles or anchors that are underground.

(15) "Unlocatable underground facilities" mean underground facilities that cannot be marked with reasonable accuracy, including nonconductive sewers and nonmetallic underground facilities that have no trace wires.

PROJECT PLANS TO NOTIFY EXCAVATOR OF REQUIREMENTS OF LAW

952-001-0020 All project plans shall contain the following statement:

ATTENTION: Oregon law requires you to follow rules adopted by the Oregon Utility Notification Center. Those rules are set forth in OAR 952-001-0010 through OAR 952-001-0090. You may obtain copies of the rules by calling the center. (Note: the telephone number for the Oregon Utility Notification Center is (503) 232-1987).

PERMITS TO NOTIFY EXCAVATOR OF REQUIREMENTS OF LAW

952-001-0030 Any entity authorized to issue permits for construction which requires excavation shall include on such permits the language set out in OAR 952-001-0020.

PRE-MARKING REQUIRED BY THE EXCAVATOR; EXEMPTION

952-001-0040 (1) Except as provided in paragraph (2) of this rule, prior to notifying the Oregon Utility Notification Center, an excavator shall pre-mark with the color white the immediate area of the proposed excavation within both the public rights-of-way and underground easements.

(2) An excavator need not pre-mark as required in paragraph (1) of this rule if:

> (a) The operator can determine precisely the direction, length and location of the proposed excavation by referring to a locate ticket; or
>
> (b) The excavator and operator have had a meeting prior to the beginning of the proposed project, at the construction site for the exchange of information required under paragraph (1) of this rule.

EXCAVATOR TO GIVE NOTICE OF PROPOSED WORK; EXEMPTION

952-001-0050 (1) Except as provided in paragraph (2) of this rule, at least two (2) business days, but not more than ten (10) business days before commencing an excavation, the excavator shall notify the Oregon Utility Notification Center of the date and location of the proposed excavation, and the type of work to be performed.

(2) The notice requirement of paragraph (1) of this section shall not apply if the excavation is in response to an emergency, or if all of the following apply:

(a) The excavator is a tenant or an owner of private property;

(b) The excavation is on private property of that owner or tenant;

(c) The excavation is less than twelve (12) inches in depth; and

(d) The excavation is not within an established easement.

(3) An excavator, when giving notice in compliance with paragraph (1) of this rule, shall furnish information as to how the excavator can be contacted.

WHEN EXCAVATOR MAY GIVE LESS THAN FORTY-EIGHT (48) BUSINESS DAY HOUR NOTICE

952-001-0060 An excavator may provide less than two (2) business days (48) hours prior notice if:

(1) The excavator is responding to an emergency, so long as the excavator notifies the Oregon Utility Notification Center immediately and so long as the excavator takes reasonable care to protect underground facilities;

(2) The excavator has an agreement with each operator of underground facilities that marks will be provided on a regular basis as the excavator progresses through a project; or

(3) The excavator discovers an underground facility in an area where the operator of underground facilities had previously indicated there were no facilities.

OPERATORS TO MARK UNDERGROUND FACILITIES OR NOTIFY EXCAVATOR THAT NONE EXIST

952-001-0070 (1) Except as provided in paragraph (3) of the rule, within two business days (48 hours) after the excavator notifies the Oregon Utility Notification Center of a proposed excavation, the operator of the underground facilities shall:

(a) Mark with reasonable accuracy all of its locatable under ground facilities within the area of proposed excavation. All marks shall indicate the name, initials or logo of the operator of the underground facilities, and the width of the facility if it is greater than two (2) inches;

(b) Provide the excavator the best description available to the operator of the unlocatable underground facilities in the area of the proposed excavation including as-constructed drawings, or other facility maps that are maintained by the facility operator;

(c) Notify the excavator that in the area of the proposed excavation there are underground facilities which are not marked because those facilities are at a depth greater than the excavator plans to excavate; or

(d) Notify the excavator that the operator does not have any underground facilities in the area of the proposed excavation.

(2) If an excavator uses offset marking, the excavator shall correctly measure the amount of offset, so that the excavator can reestablish the location of underground facilities where originally marked.

(3) If the excavator notifies the operator of underground facilities discovered during an excavation in response to an emergency, the operator of underground facilities shall comply with subsection (1) of this section as soon as possible.

(4) Underground facilities shall be marked in accordance with the following designated color code:

RED Electric power lines, cables or conduit, and lighting cables.

YELLOW	Gas, oil, steam, petroleum, or other hazardous liquid or gaseous materials.
ORANGE	Communications, cable TV, alarm or signal lines, cables or conduits.
BLUE	Water, irrigation, and slurry lines.
GREEN	Sewers, drainage facilities or other drain lines.
WHITE	Pre-marking of the outer limits of the proposed excavation or marking the centerline and width of proposed lineal installations of buried facilities.
PINK	Temporary Survey Markings

(5) In areas of ongoing excavation or construction operators shall mark newly installed underground facilities immediately upon placement.

(6) Except while making minor repairs to existing non-conductive, unlocatable facilities, an operator burying non-conductive, unlocatable facilities within the public rights-of-way or utility easements shall place a tracer wire or other similar conductive marking tape or device with the facility to allow for later location and marking.

(7) An operator of underground drainage lines is not required to indicate the presence of those facilities if the existence and route of those facilities can be determined from the presence of other visible facilities, such as manholes, catch basins, inlets, outlets, junction boxes, storm drains or permanent marking devices.

OPERATORS TO RESPOND TO NOTIFICATIONS REQUESTING DESIGN INFORMATION

952-001-0080 Within ten (10) business days after a designer notifies the Oregon Utility Notification Center of a proposed project, the operator of the underground facilities shall:

(1) Mark with reasonable accuracy all of its locatable underground facilities within the area of proposed excavation. All marks shall indicate the name, initials or logo of the operator of the underground facilities, and the width of the facility if it is greater than two (2) inches;

(2) Provide the excavator the best description available to the operator of the unlocatable underground facilities in the area of the proposed excavation including as-constructed drawings, or other facility maps that are maintained by the facility operator; or

(3) Contact the person requesting design information and agree on a time, prior to the beginning of the proposed project, for exchange of the information required under paragraph (1) or paragraph (2) of this rule.

DELAY OF EXCAVATION UNTIL RESPONSE FROM FACILITY OPERATORS; DUTY OF EXCAVATOR TO USE REASONABLE CARE; DAMAGE TO FACILITIES

952-001-0090 (1) An excavator shall not commence an excavation which requires notice under these rules until the excavator has received a response from each operator of underground facilities in the area of the proposed excavation, or until at least two (2) business days (48 hours) have elapsed from the time the excavator notified the Oregon Utility Notification Center.

(2) Once underground facilities have been marked, the excavator shall:

> (a) Maintain marks during the excavation period to ensure that the original marks remain effective for the life of the project and can be re-established;
>
> (b) Stop excavating in the vicinity of the underground facility and notify the Oregon Utility Notification Center to have the route re-marked as specified in these rules **and**, if prior to or during the excavation process, the marking and/or route of any underground facility is removed or no longer visible; and
>
> (c) Employ hand tools or other such non-invasive methods to determine the exact location of the underground facility when excavation is to be made within the reasonable accuracy zone.

(3) The excavator shall provide such lateral and subjacent support for underground facilities as may be reasonably necessary for the protection of such facilities.

(4) If the excavator causes or observes damage to underground facilities, the excavator shall notify the operator of the underground facilities imme-

diately. If the damage causes an emergency, the excavator shall also notify all appropriate local public safety agencies immediately by calling 911 and shall take reasonable steps to insure the public safety. The excavator shall not bury damaged underground facilities without the consent of the operator of the damaged underground facilities.

(5) If an excavator discovers underground facilities in an area where the operator of the underground facilities had previously stated there were no underground facilities, the excavator shall, prior to continuing excavation, notify the Oregon Utility Notification Center. After providing notification, the excavator shall use extreme care in the affected area.

Stat. Auth.: Sections 1 to 5 and 7, Chapter 691, Oregon Laws 1995 Hist:

Business Hours

The Center will be available for request 24 hours a day, 7 days a week. Requests received outside normal business hours will be transmitted at the start of the next business day. The 48 hour notification period will also begin at the start of that business day.

Complaint Process

This process is Complaint Driven and administered by the Oregon Public Utility Commission. All penalties provided under this law are set forth in SSB 559 Section 7. The actual complaint process is outlined in separate rules documented and administered by the OPUC.

Permanently Marking Underground Facilities

The following recommendations shall be followed when permanently marking underground facilities.

1. Markers must be visible from the street of roadway.
2. Marker material shall be durable in nature.
   (Treated Wood, Metallic, UV Resistant Plastics, etc.)
3. Mark culvert inlets if not readily visible. Mark both ends of all non-visible underground facilities.
4. Identify type of underground facility if not recognizable from the surface.
5. It is also recommended that the "OUNC Call Before You Dig Number" appear on the marker, if the marker is of sufficient size.

Reasonable Accuracy

Reasonable Accuracy Of Marking Undergound Facilities
OAR 952-001-0010 (12)

"Reasonable accuracy" means location within twenty-four (24) inches of the outside dimensions of both sides of an underground facility. Offset marking, when used, will have the same tolerance of accuracy.

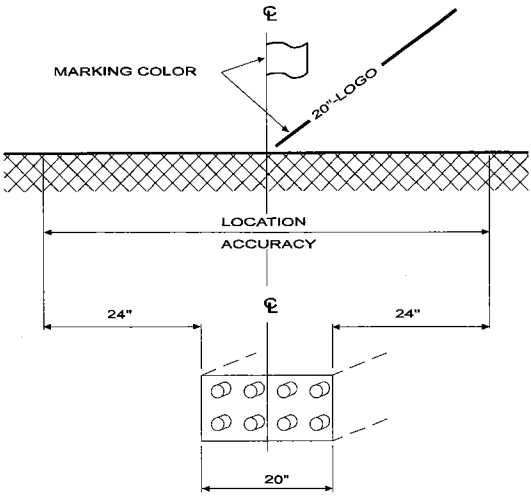

FACILITY LARGER
THAN 2"

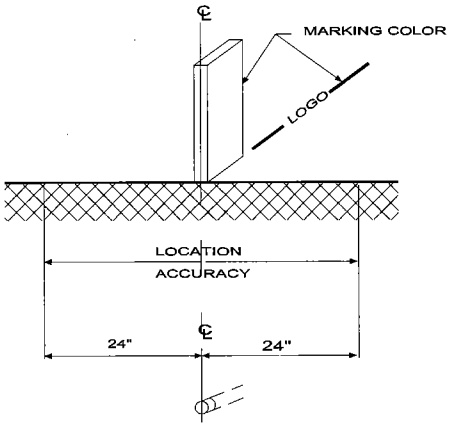

SMALL FACILITY
2" OR LESS

Typical Street Marking

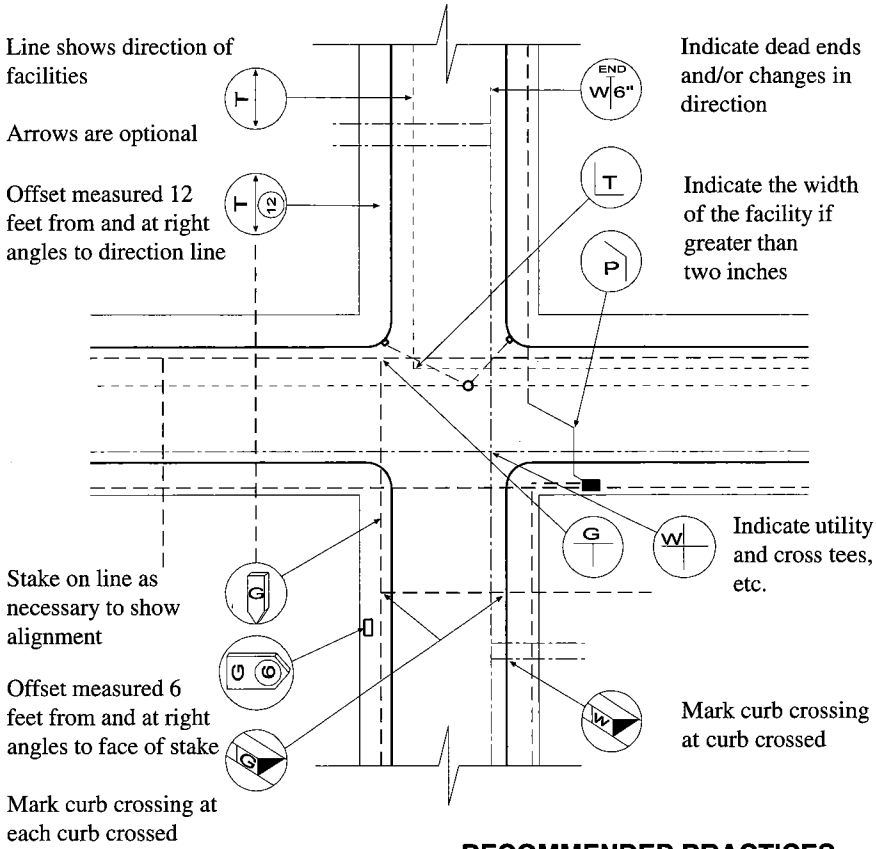

RECOMMENDED ABBREVIATIONS	
T	Telephone
P	Power (Electric)
W	Water
G	Gas
S	Sanitary Sewer
ST	Storm Sewer
TV	Cable (Television)

RECOMMENDED PRACTICES

1. Marks should indicate the name, initials or logo of the owner of the underground facilities. Make your letters clear and concise.

2. Indicate bends, offsets, and/or dead ends. Do not leave the other party guessing.

3. Do not attempt to show more than one utility at any location.

4. Indicate the width of the facility if it is greater than two inches.

Color Code

Color Code For Marking Location Of Underground Facilities
OAR 952-001-0070 (4)

Colors for marking location of underground facilities are listed below:

Color	To Indicate
Red	Electric power lines, cables or conduit, and lighting cables.
Yellow	Gas, oil, steam, petroleum or other hazardous liquid or gaseous materials.
Orange	Communications, cable TV, alarm or signal lines, cables or conduits.
Blue	Water, irrigation, and slurry lines.
Green	Sewers, storm sewer facilities or other drain lines.
White	For premarking of the outer limits of the proposed excavation or marking the centerline and width of proposed lineal installations of cables, conduits, or other items where the trench will not exceed 24 inches in width. It is recommended for the maintenance of all locate marks after the initial locate by the facility operators
Pink	Temporary survey markings.

Recommended by the American Public Works Association.

Oregon Occupational Safety and Health Code

SPECIFIC EXCAVATION REQUIREMENTS

OAR 437-83-3449 Prior to opening an excavation, effort shall be made to determine whether underground installations, i.e., sewer, telephone, water, fuel, electric lines, etc., will be encountered, and if so, where such underground installations are located.

a. Utility companies shall be contacted and advised of proposed work prior to the start of actual excavation.

b. When the excavation approaches the estimated location of such an installation, the exact location shall be determined.

c. Means shall be taken to prevent dangerous contact or hazardous unintended movement (Formerly 34-14-10).

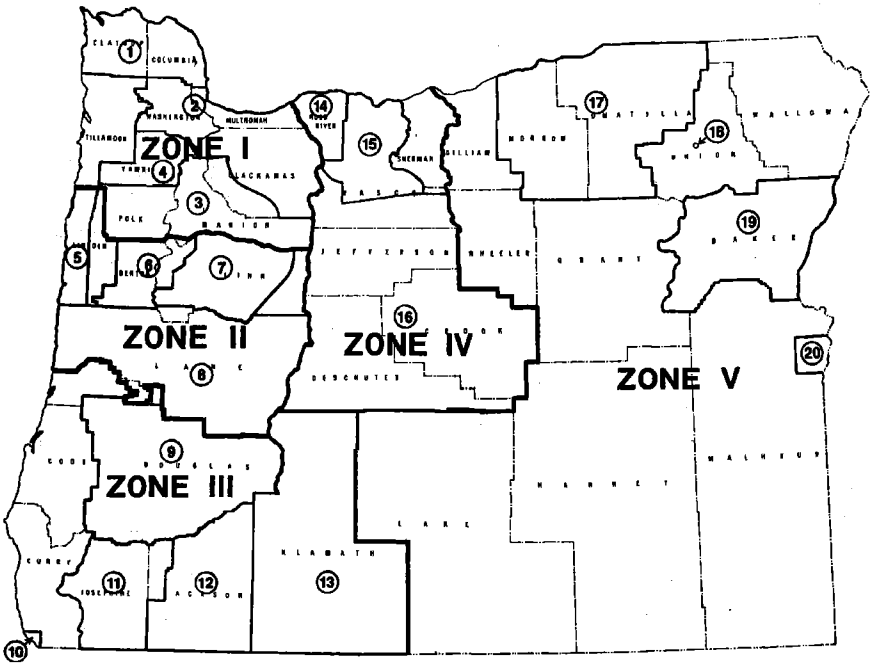

KEY TO MAP

AREA NUMBER	COUNCIL NAME/UTILITY NOTIFICATION SYSTEM	SYSTEM NUMBER
Zone I		
1	Lower Columbia UCC	800-332-2344
2	Metropolitan UCC	503-246-6699
3	Mid-Willamette UCC	800-332-2344
4	Yamhill UCC	800-332-2344

AREA NUMBER	COUNCIL NAME/UTILITY NOTIFICATION SYSTEM	SYSTEM NUMBER
Zone II		
5	Lincoln County UCC	800-332-2344
6	Linn-Benton UCC	800-332-2344
7	East Linn UCC	800-332-2344
8	Lane UCC	800-332-2344
Zone III		
9	Douglas UCC	800-332-2344
10	South Coast UCC	800-332-2344
11	Josephine UCC	800-332-2344
12	Rogue Basin UCC	800-332-2344
13	Klamath UCC	800-332-2344
14	Hood River UCC	800-332-2344
Zone IV		
15	Wasco County UCC	800-332-2344
16	Central Oregon UCC	800-332-2344
Zone V		
17	Ummatilla, Morrow, Gilliam County UCC	800-332-2344
18	La Grande/Union UCC	800-332-2344
19	Baker UCC	800-332-2344
20	Malhuer UCC (Onterio, Vale, Nyssa)	800-332-2344

Construction Coordinating

With continued growth in population and industry in Oregon, a greater degree of standardization and coordination of underground utilities must be attained so that utility installations are done at a maximum efficiency and minimum cost. The end result will be lower costs and less inconvenience to the public which we all must serve.

Utility installations may involve new public rights of way, existing public rights of way, subdivision plats or private projects. Procedures common to all four areas are as follows.

PRELIMINARY DESIGN PROCEDURE

When extension of utilities and/or construction of surface improvements are being designed, the body initiating the proposed project should submit plans to the representative government agency and all utilities serving the area. The location of existing utility facilities should be determined and shown as clearly as possible on the project plans. Design of the location of proposed utility facilities should follow as closely as possible the standard locations recommended for the area involved and also be shown on project plans. It is realized that in the case of existing utilities and street improvements, standard locations may not be compatible. Space for future utility extensions and installations should be considered in the project design.

Distribution of preliminary plans should be done in a timely manner so that all affected agencies and utilities have sufficient time to review the plans and submit comments on the project.

New subdivision plats may provide lot line easements for the installations of utilities.

Installation or relocation of utility facilities for private projects may differ in the fact that only those utilities required to meet the needs of the project will be required and their installation may not necessarily conform to any standard. Compliance with requirements of appropriate governing public agencies will have to be met.

PRELIMINARY CONSTRUCTION PROCEDURE

Availability and scheduling of funds, labor, and materials are major concerns of governmental agencies, private developers and utilities alike. There-

fore, it would be beneficial for all concerned to mutually resolve their concerns as far in advance of construction as possible.

On complex of extensive projects, it may be beneficial to schedule a pre-bid meeting to clarify construction and utility relocation problems for prospective bidders. Any unusual utility relocation timing requirements should be identified.

After acceptance of bids on the project a pre-construction meeting should be held with all affected parties present including , but not limited to, representatives of: (1) the initiation body or developer and his engineer; (2) all affected governmental agencies; (3) all affected utilities, and (4) all major contractors on the project.

Some items to discuss and resolve should be: (1) contractor's proposed work schedule; (2) timing of installation of various facilities; (3) special requirements peculiar to any affected agencies; (4) scheduling and availability of any special materials required: (5) necessary relocation of existing facilities; (6) outline responsibilities and duties of all bodies involved in the project; and (7) any other items of particular importance depending on the project.

On a private project the developer or the engineer normally assume responsibility for properly coordinating utility installations. As a follow-up measure, notes should be taken of what was discussed and decided with copies distributed to those in attendance. A list of the attendees with their phone numbers and affiliations should also be included with the meeting notes.

UTILITY EASEMENTS

Some subdivision lots have platted lot line easements reserved for the installation, operation and maintenance of utility facilities. The use of these easements is a matter of cooperation on the part of both the land owner and the utilities.

Utility facilities should be installed and maintained in a professional manner and the premises restored as nearly as practicable to the same condition it was prior to the utility installation. Building or other structures should not be constructed on these easements and no operation should be carried out upon the easement which would prevent or jeopardize the safe operation and maintenance of the utility facilities.

OUCC Joint Trench Recommendations

With continued growth in population and industry in Oregon, a greater degree of cooperation, standardization and coordination of underground utilities must be obtained so that utility installations are done at maximum efficiency, minimum cost and least environmental impact.

Joint trenching has become a very viable means of installing buried utilities to maximize trench efficiency and minimize cost when the area for trenching is at a minimum or the type of soil (rock) is at a premium cost to excavate.

Due to the long term benefits, it is recommended that conduit be used whenever possible. The use of conduit increases protection, decreases repair cost, and minimizes disruption the general public.

The following is a suggested format for joint trenching that should be followed by all utilities using the joint trench. In all cases excavations must meet the requirements of applicable codes and standards within the State of Oregon.

Trench Detail I
Not To Scale

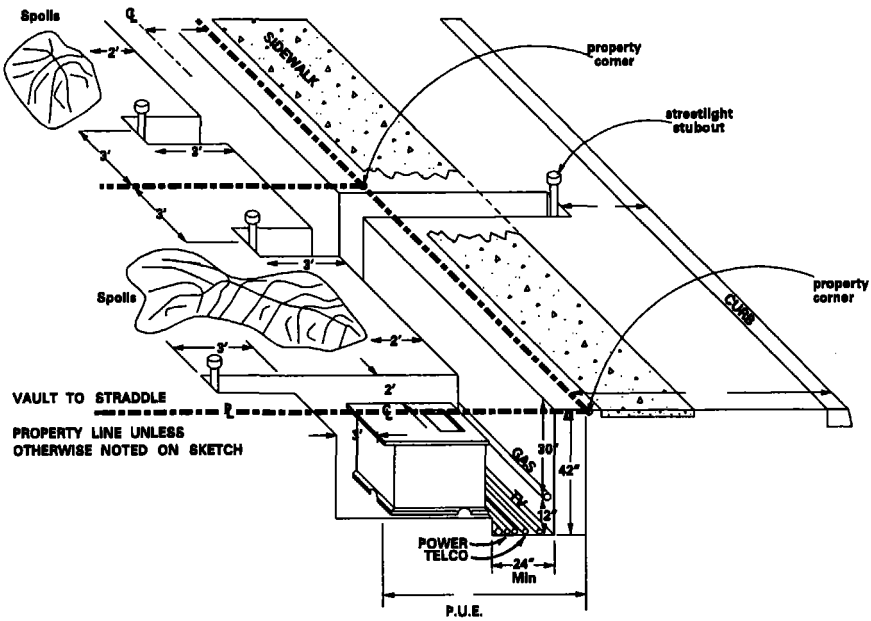

Trench Detail II
Not To Scale

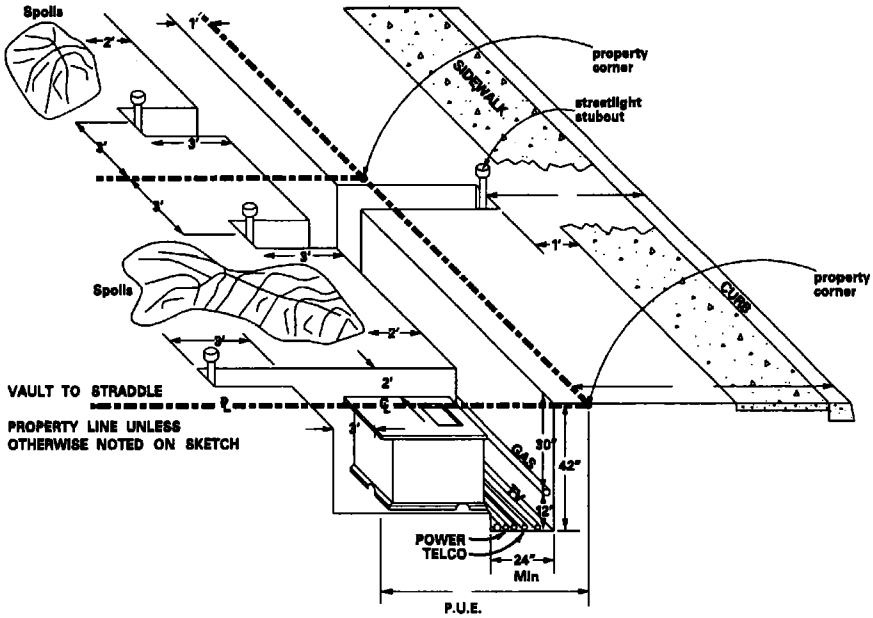

JOINT TRENCH TYPICAL: W/O GAS

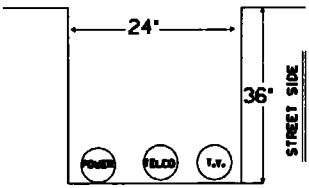

JOINT TRENCH TYPICAL: WITH GAS

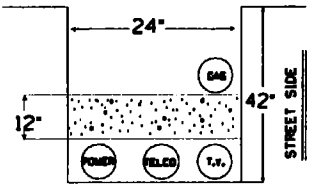

DATE

SUBSTRUCTURE DAMAGE SUMMARY

* 1. Reporting organization_____

* 2. Number of damages occurring to your underground lines_____

3. Number caused by contractor_____Another utility_____

Home owner or occupant_____Government Agency_____

4. What type of work was taking place where the damage occurred:

SEWER___WATER___TELE___ELEC___GAS___ROAD___TV___OTHER____

5. Reason why damage occurred:

Failed to request location_____

Failed to expose, by hand methods, where located and marked_____

Other miscellaneous_____

6. How many customers were inconvenienced_____

* 7. Number of requests received by you for locating service_____

_____
PERSON COMPLETING REPORT

_____
TELEPHONE NUMBER

* Required for state reporting only

Substructure Damage Summary Key

1. Name of utility, agency, or council and period of report.

2. Enter the number of damages occurring to your underground lines during the reporting period. A damage is any contact with your line that requires some type of repair to put it back to its condition prior to being hit. Damages to above ground apparatus that supports or connects underground lines should not be reported unless dug into.

3. Enter the number of damages done by each of the appropriate entities (contractors, another utility, homeowner or occupant and government agency). All water, sewer, power, gas and communications entities are considered utilities, regardless of ownership

4. Enter the number of damages in each category for type of work taking place.

5. Enter number of damages occurring for:
   Failed to request location.
   Failed to expose, by hand methods, where located and marked.
   Other miscellaneous.

   Note: The total listed in 3, 4, and 5, should each equal the amount shown on 2.

6. Enter the number of customers inconvenienced by the damaged facility.

7. Enter the number of requests received by any means for location service, where some proposed excavation was to take place, whether or not any underground facilities exist in the area.

UTILITIES NOTIFICATION CENTER
LOCATION REQUEST FORM

Phone Number: (___)_____ Ext.: _____ Caller ID_____

Caller Name: (Your name)_____

Company Name: (Company you are with)_____

Mailing Address: (Company mailing address)_____

City: _____ State: _____ Zip:_____

Alternate Contact Name: (In case you are not available)_____

Alternate Contact Phone Number: (____)_____

EXCAVATION INFORMATION

Work To Begin Date and Time: (Per state law 2 working days)_____

Will you be working within 10 feet from an overhead power line? Y / N

Type of work: (The reason for the excavation; not the method)_____

County: (Work is in)_____ City: (City work is in)_____

Address: (Address of work site)_____

Street: (Street name and modifier)_____

Nearest intersecting street: (Nearest cross street, distance and direction to work site)

_____

Location of work: (Where specifically at the job site will you be digging-area that needs to be located)_____

Remarks: (Any other pertinent information)_____

_____

Utilities Notified: (Given by UNC)_____

_____

Ticket Number: (Given by UNC)_____

Before a ticket number can be issued, the operator will verify all information to make sure it is accurate, then list the utilities to be notified. The utilities notified are based on township, range, section and 1/4 section. If you can provide this information it will speed up the call taking process. You may be asked to hold if you cannot provide this information.

Frequently Asked Questions

1. When I call for a locate will all the facilities be located to my residence or business?

   Answer: Most utilities will locate to their Meter or Meter Base or Demarcation device. This includes Gas, Electric, Water, Telephone and CATV.

2. Is their a charge for locating the utilities?

   Answer: As long as the Operator's facilities are located in the Public Right of Way there will be no charge.

3. Can I use the same color marking paint to maintain my locates?

   Answer: It is recommended that locate markings be maintained with White marking paint.

4. Can I start my excavation before the 48-hour locate deadline?

   Answer: It is strongly recommended that you wait the 48-hour waiting period. This allows all utilities to complete their locates. If you start before that time you may be accepting the liability for a Dig Up.

5. When Directional Boring, am I required by law to pot hole and visually check depth of the facilities?

   Answer: Yes. Refer to OAR 952-001-0090 (2) (C)

6. What is the difference between the One Call Center and the locating Company?

   Answer: The OUNC is an information gathering service that identifies the Operators with facilities in your excavation area. The OUNC then notifies all Operators of the excavation and the operators are then responsible for the location and marking of their facilities.

7. How are Fines to be imposed? If there is a fine assessed against me what happens to the money collected?

   Answer: Fines are imposed through a complaint process administered by the OPUC. If a fine is imposed all Money collected will be forwarded to the OUNC education and training fund.

Important Phone Numbers

Name	Telephone Number

Special thanks to the following two companies for providing the funds to print this manual:

Northwest Pipeline Corporation
&
Pacific Gas Transmission

Printed on Recycled Paper